TOF support structure

NASA/GSFC (1/16/2003)

Makoto Sasaki

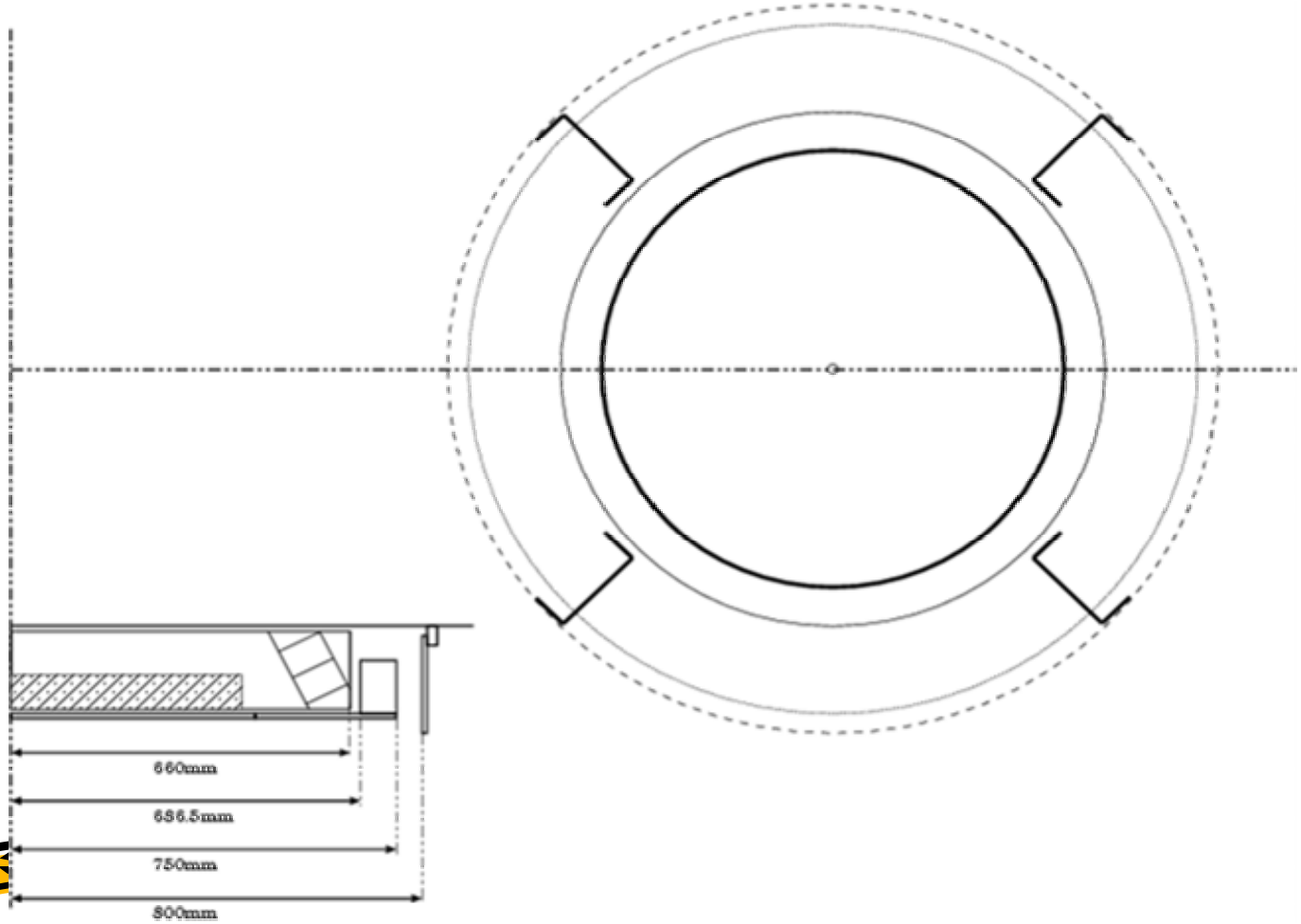
660mm
656.5mm
750mm
800mm

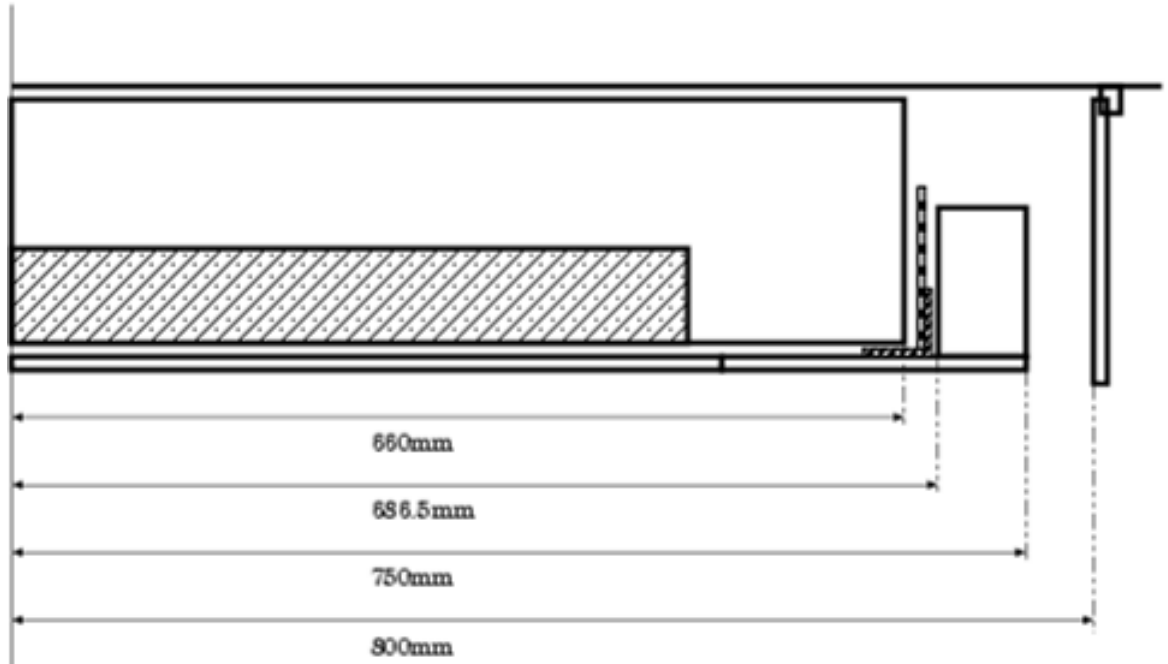
660mm
686.5mm
750mm
800mm

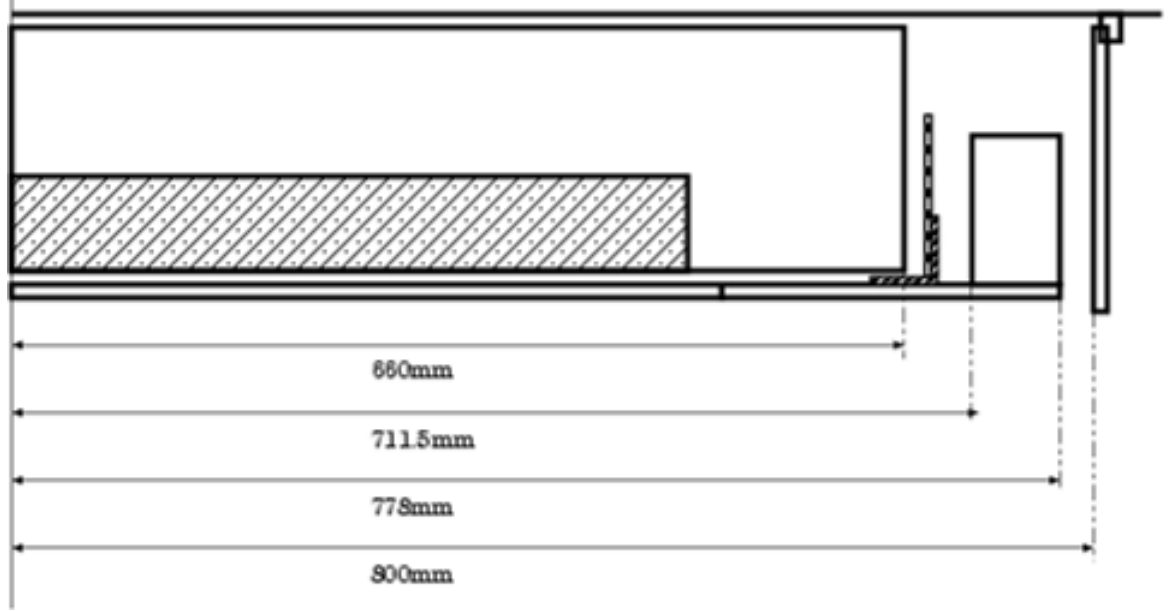
660mm
711.5mm
778mm
800mm

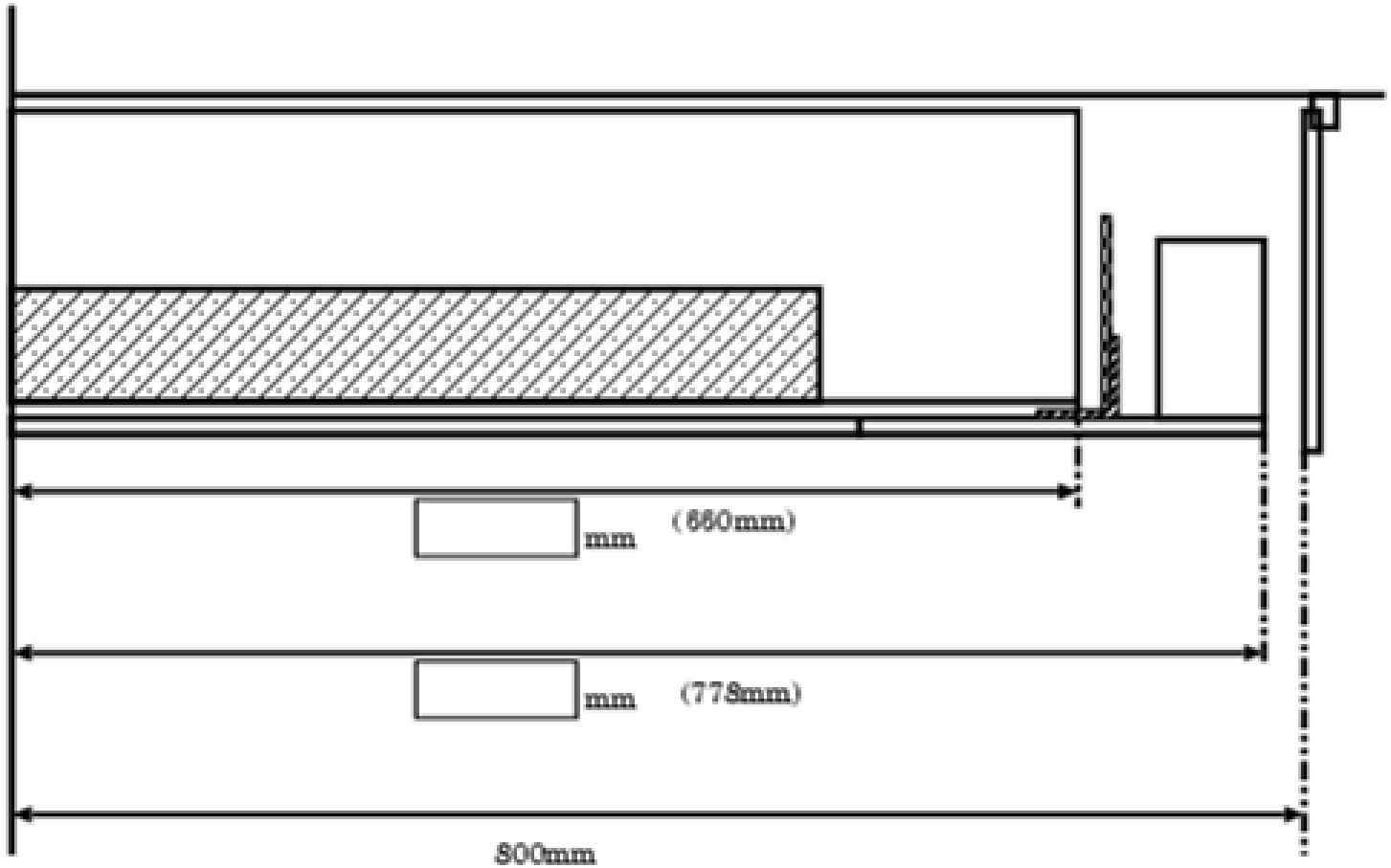
mm
(660mm)
mm
(778mm)
800mm

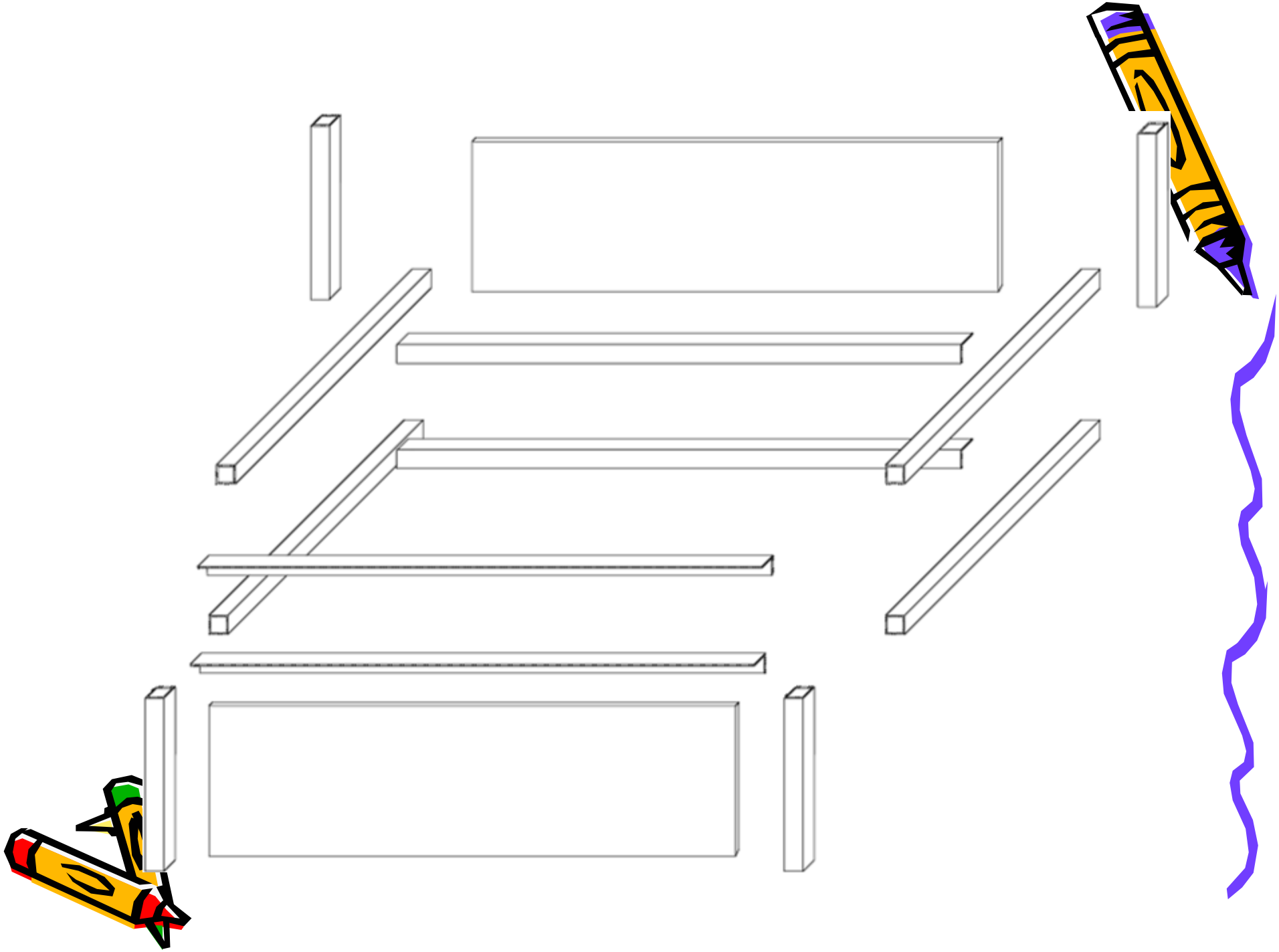

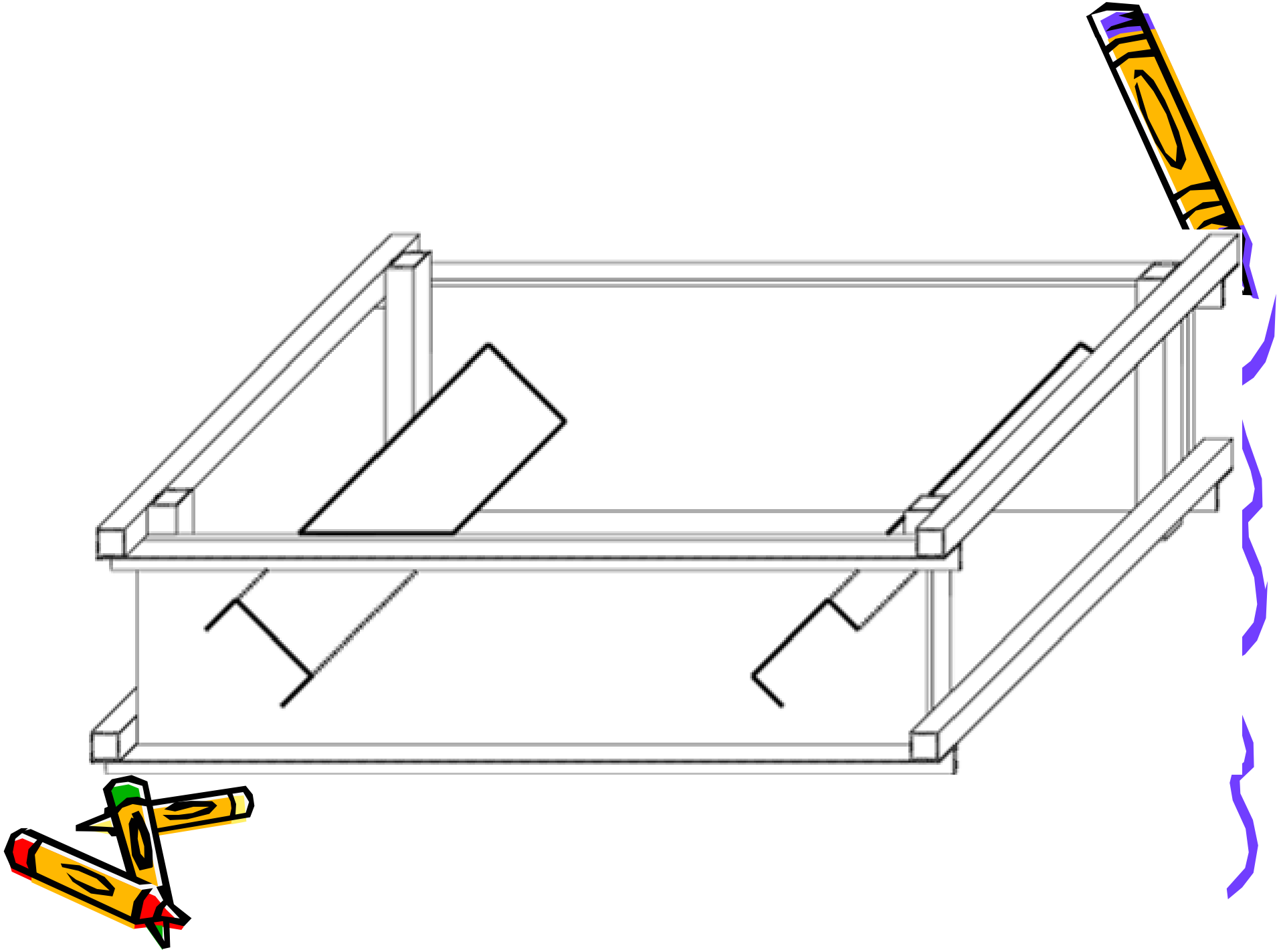

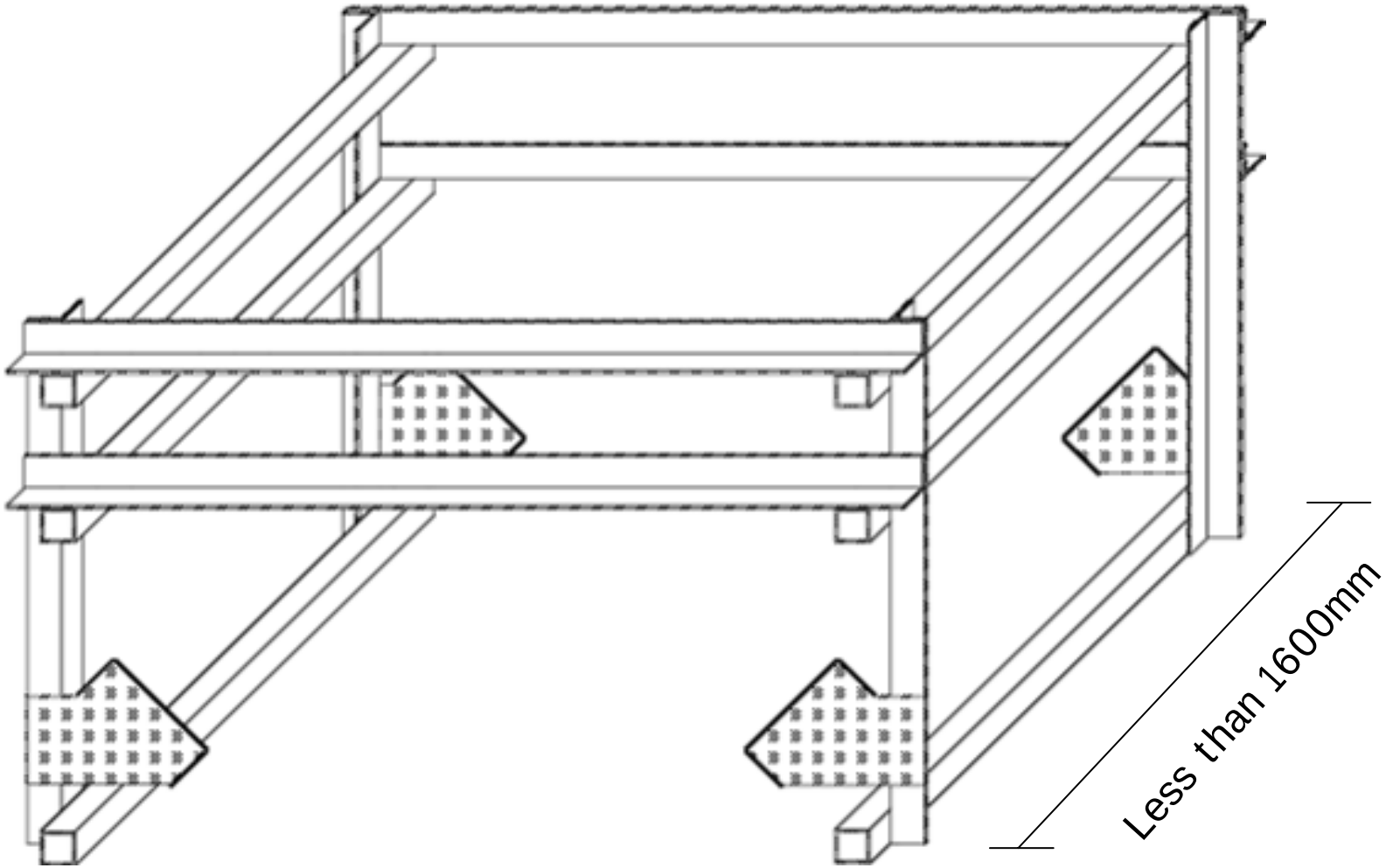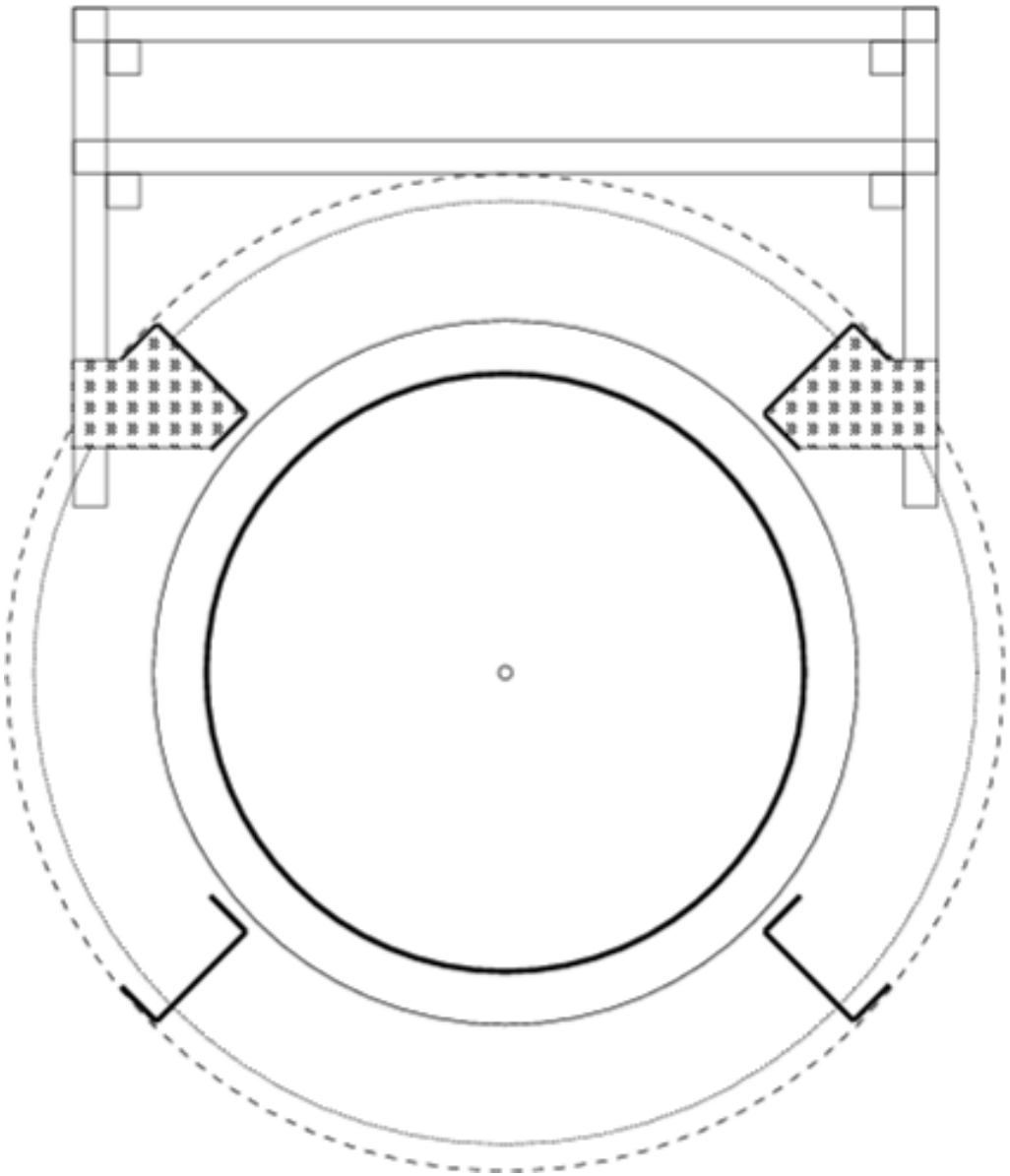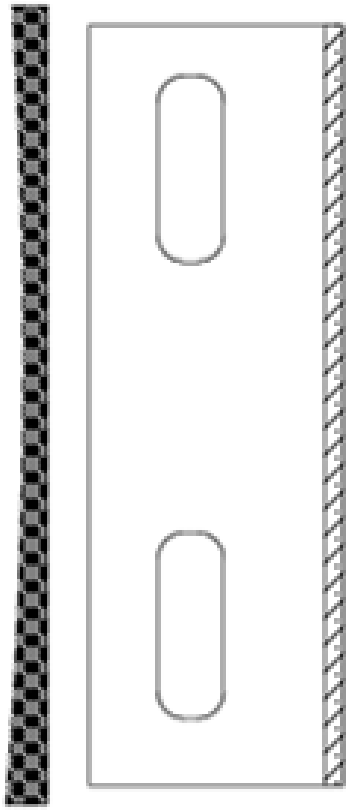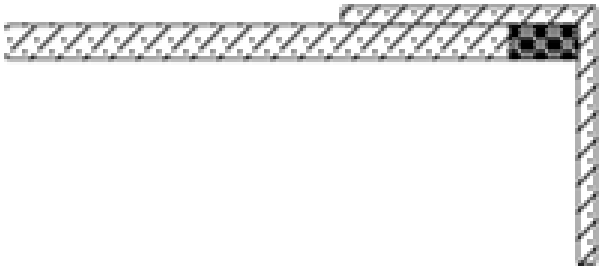
Less than 1600mm